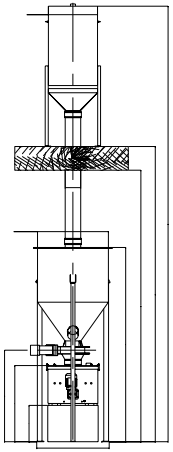

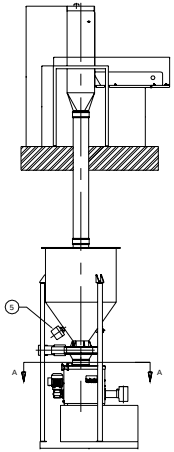

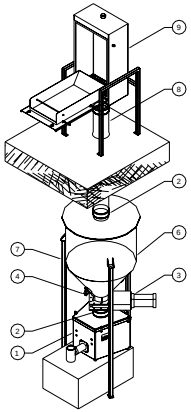

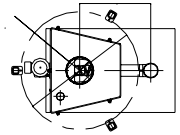

SECTION A-A
SCALE 1:10

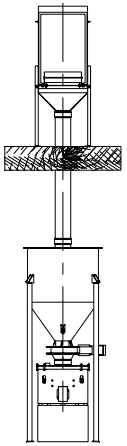

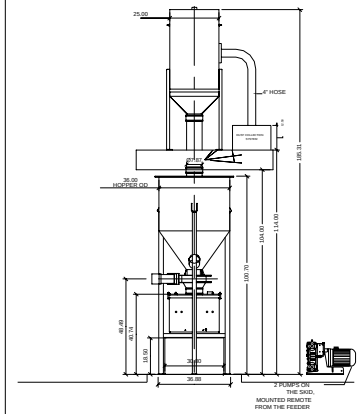

A END VIEW
1/2"=1'-0"

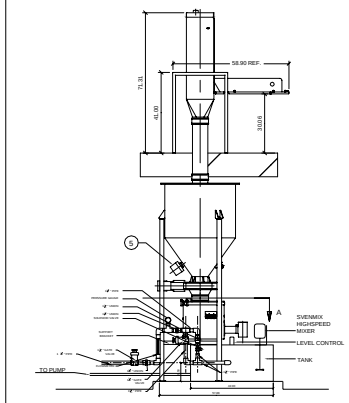

B SIDE VIEW
1/2"=1'-0"

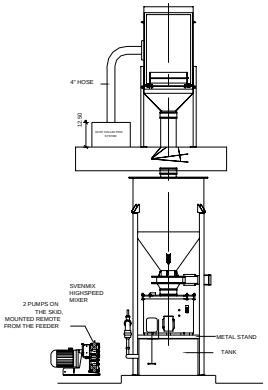

C FRONT VIEW
1/2"=1'-0"

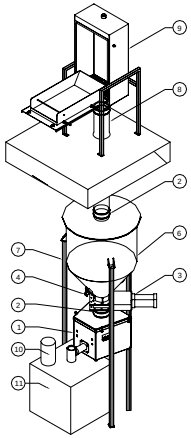

ITEM	DESCRIPTION	REMARKS
1	TANK	1000 GALLON POLYETHYLENE
2	SVENMIX	SVENMIX HIGHSPEED MIXER
3	OVERFLOW CONNECTION	3/8" OVERFLOW CONNECTION
4	MOUNTING PLATE	1/4" THICK MOUNTING PLATE FOR SVENMIX
5	HOPPER	1000 LITER HOPPER
6	LEVEL SENSOR	LEVEL CONTROL SENSOR, ULTRASONIC TYPE, 0-10VDC OUTPUT, 0-10 METERS, 4-20MA, 2 RELAYS, 2 LED, IP67
7	OVERFLOW SENSOR	OVERFLOW SENSOR, ULTRASONIC TYPE, 0-10VDC OUTPUT, 0-10 METERS, 4-20MA, 2 RELAYS, 2 LED, IP67
8	SUPPORTS	SUPPORTS SUPPORT ARMS 1/4"
9	PRESSURE PLATE	1/4" LARGER THAN TRANSMITTER PLATE
10	SUPPORTS	1/4" THICK PLATE
11	TANK	1000 GALLON TANK
12	MOTOR	1/2 HP MOTOR
13	MOTOR CONTROL	1/2 HP CONTROL

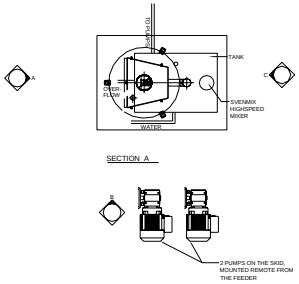

SECTION A

D ISOMETRIC VIEW
NO SCALE
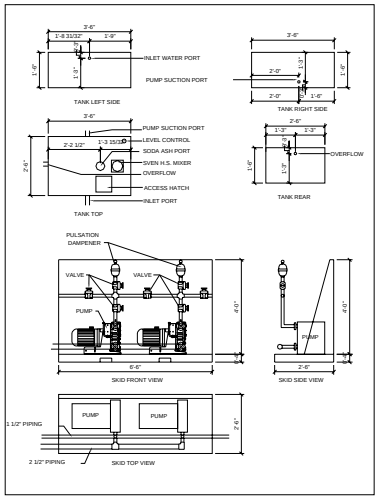
E PLAN VIEW
1/2"=1'-0"